Manufacturer of all kind of

Brass Cable Glands and Accessories

MARUTI
BRASS PRODUCTS

+91 95745 94421
+91 70464 04697

marutibrass.overseas@gmail.com
info@marutibrassproducts.com

www.marutibrassproducts.com

Plot No. 4204, F Road, Phase-3, Dared, Jamnagar - 361004, Gujarat, INDIA.

MARUTI BRASS PRODUCTS

Our Philosophy

It is our strong desire always to remain in contact continuously with all our customers. Our Directors visit each of these customers personally at least once a year. This has helped us not only to grow but also to establish a long term business association and friendship.

Our customers are not just customers but in true sense they are "Business Partners" who are a constant source of inspiration in our progress.

Our Quality is superb, the Service is excellent, and support to our customer is genuine. We offer in general best of everything at a very competitive price.

About Us

Manufacturers and Exporters of Brass Industrial Cable Glands and Accessories Conduit Fittings and Accessories. Brass Sanitary Fittings, Brass Bars, Tubes and Sections, Brass Articles, Brass Auto Parts and Fittings. All Types of Precision Brass Components and Parts.

Product Range and Vision

"MARUTI" produces Cable Glands, which are manufactured and tested as per prevailing International Standards. In order to satisfy demands of different testing authorities and choosy customers, our range of Cable Glands are as per British Standards BS 6121 and as per German Standards (PG GLANDS). We have tested our most popular and highly demanded BW and CW Glands with B.S.I. standard BS:6121 PART | 1987.

Components, Parts and Accessories

MARUTI BRASS PRODUCTS is also manufactures literally hundreds of components, parts and accessories suitable for Electrical Fittings and Apparatus. All these parts and components are strictly as per drawing and specifications. These parts and components are carefully manufactured with automatic machines in a controlled environment with absolute quality control. These components are ideally suitable for Switches, Sockets, Plugs, Switchgear and Control gear industry and Electrical Energy Meters.

Our Brass Products

"MARUTI BRASS PRODUCTS" is specialized and has been a master craftsman for Brass Products. We have our own integrated manufacturing unit wherein we produce our own Brass Bars, Rods and Sections by Extrusion method. Our other products include Brass Sanitary Fittings, Brass Builders Hardware, Brass Auto Components, Refrigeration and Air Conditioner parts etc. Primarily for brass item where machining is involved, "MARUTI BRASS PRODUCTS is doing it", based on drawing and / or sample.

Environment Policy

We are working towards a more green way of packaging our products; such that all our packaging is made of recycled, recyclable or reusable material. Our newly designed packaging will carry a note on recycling of packaging materials hence spreading awareness among the consumers about the importance of recycling or reusing packaging materials whenever possible.

Health & Safety

The following is a statement of the Company's General Health & Safety Policy in accordance. Maruti Brass Products understands the need for successful Health & Safety management policies. To sustain that commitment we will continually measure, monitor and revise where necessary an annual plan to ensure that Health and Safety standards are adequate.

marutibrass.overseas@gmail.com
info@marutibrassproducts.com
www.marutibrassproducts.com
+91 95745 94421
+91 70464 04697

INDEX

Brass A1 Cable Glands 01
Brass A2 Cable Glands 02
Brass BW Cable Glands 03
Brass BW 4 Part Cable Glands 04
Brass BWR Cable Glands 05
Brass CW Cable Glands 06
Brass CW 4 Part Cable Glands 07
Brass Marine Cable Glands 07
Brass E1W Cable Glands 07
Brass Alco Cable Glands 08
Brass PG Cable Glands 08
Brass Matric Cable Glands 08
Brass Double Compression Cable Glands 09
Brass Single Compression Cable Glands 09
Brass Cable Glands Accessories 09

www.marutibrassproducts.com

MARUTI BRASS PRODUCTS
www.marutibrassproducts.com

marutibrass.overseas@gmail.com
info@marutibrassproducts.com
www.marutibrassproducts.com
+91 95745 94421
+91 70464 04697

Brass A1 Cable Glands

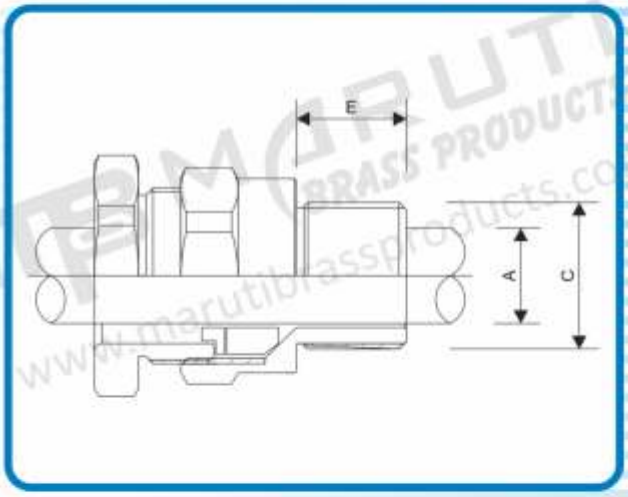

Brass A1 Cable Glands

Code	Gland Size	Threaded Size 'C'		Threaded Length 'E'	Across Flat 'AF'	Across Corner 'AF'	Cable Diameter 'A'	
		Metric	NPT				Min.	Max.
MBA1-20S16	20S16	M20	3/8"	10	24.50	27.00	3.20	8.70
MBA1-20S	20S	M20	1/2"	10	24.50	27.00	6.10	11.70
MBA1-20L	20L	M20	1/2"	10	27.00	30.00	6.50	14.00
MBA1-25	25	M25	3/4"	10	36.00	40.00	11.10	20.00
MBA1-32	32	M32	1"	10	41.00	45.00	17.00	26.30
MBA1-40	40	M40	1.1/4"	15	50.00	55.00	23.50	32.20
MBA1-50S	50S	M50	1.1/2"	15	55.00	60.00	31.00	38.20
MBA1-50L	50L	M50	2"	15	60.00	66.00	35.60	44.00
MBA1-63S	63S	M63	2"	15	70.00	77.00	41.50	49.90
MBA1-63L	63L	M63	2.1/2"	15	75.00	82.00	47.30	55.90
MBA1-75S	75S	M75	2.1/2"	15	84.00	92.00	54.00	61.90
MBA1-75L	75L	M75	------	15	84.00	92.00	61.20	67.90
MBA1-90	90	M90	3"	20	108.00	118.00	66.60	79.90
MBA1-100	100	M100	3.1/2"	20	115.00	125.00	76.00	91.00

www.marutibrassproducts.com

Brass A2 Cable Glands

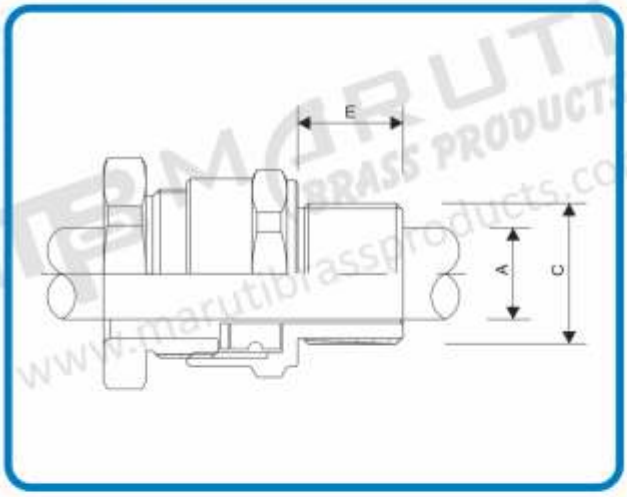

Brass A2 Cable Glands

Code	Gland Size	Threaded Size 'C'		Threaded Length 'E'	Cable Diameter 'A'	
		Metric	NPT		Min.	Max.
MBA2-20S	20S	M20	1/2"	15	8.00	11.50
MBA2-20L	20L	M20	1/2"	15	11.00	13.50
MBA2-25S	25S	M25	3/4"	15	13.00	16.50
MBA2-25L	25L	M25	3/4"	15	16.00	19.50
MBA2-32L	32L	M32	1"	15	24.00	27.00
MBA2-40S	40S	M40	1.1/4"	20	26.00	29.00
MBA2-40L	40L	M40	1.1/4"	20	30.00	34.00
MBA2-50S	50S	M50	1.1/2"	20	33.00	38.00
MBA2-50L	50L	M50	2"	20	38.00	44.00
MBA2-63S	63S	M63	2"	20	44.00	50.00
MBA2-63L	63L	M63	2.1/2"	20	49.50	55.00
MBA2-75S	75S	M75	2.1/2"	20	54.50	61.00
MBA2-75L	75L	M75	3"	20	62.00	68.00
MBA2-90L	90L	M90	3"	20	70.00	80.00
MBA2-100L	100L	M100	3.1/2"	25	82.00	90.00

marutibrass.overseas@gmail.com
info@marutibrassproducts.com
www.marutibrassproducts.com
+91 95745 94421
+91 70464 04697

Brass BW Cable Glands

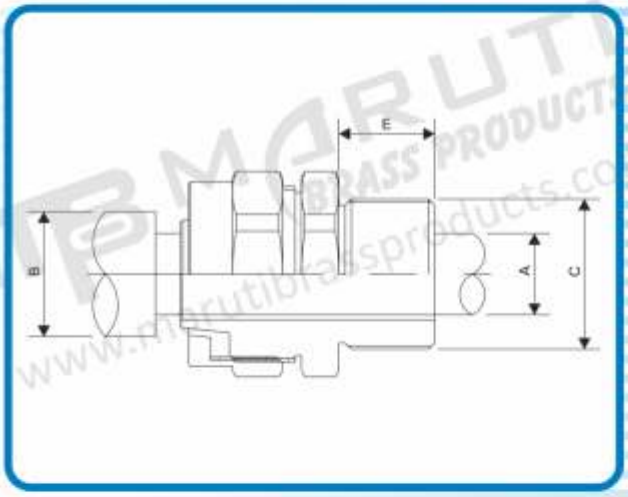

Brass BW Cable Glands

Code	Gland Size	Threaded Size 'C'	Threaded Length 'E'	A/F	Cable Range	
					Range 'A'	Range 'B'
MBBW-20S	20S	M20	10	21.00	11.50	15.50
MBBW-20L	20L	M20	10	22.50	14.00	20.50
MBBW-25L	25L	M25	10	32.50	20.00	27.20
MBBW-32L	32L	M32	10	41.00	26.30	33.50
MBBW-40L	40L	M40	15	49.00	32.00	40.00
MBBW-50S	50S	M50	15	55.00	38.20	46.30
MBBW-50L	50L	M50	15	62.00	44.00	52.60
MBBW-63S	63S	M63	15	66.50	50.10	59.00
MBBW-63L	63L	M63	15	76.00	56.00	65.30
MBBW-75S	75S	M75	15	86.50	62.00	71.60
MBBW-75L	75L	M75	15	91.50	68.00	78.00
MBBW-90S	90S	M90	20	104.50	80.50	91.00

Brass BW 4 Part Cable Glands

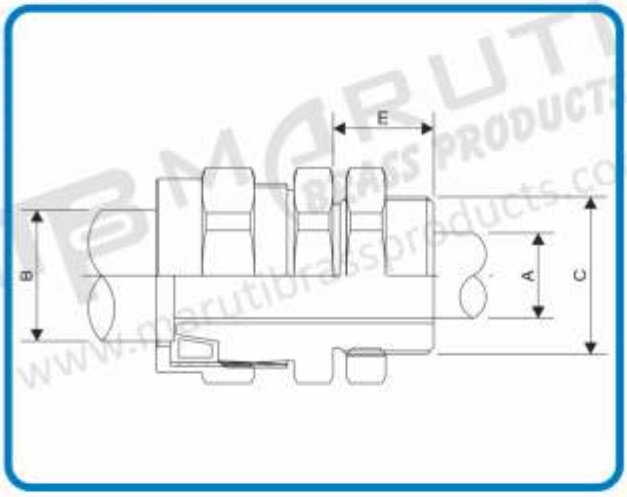

Brass BW 4 Part Cable Glands

Code	Gland Size	Threaded Size Matric 'C'	Minimum Threaded Length 'E'	Across Flat	Cable Range	
					Range 'A'	Range 'B'
MBBW4-20S	20S	M20	10	23.50	11.50	15.50
MBBW4-20L	20L	M20	10	25.00	14.00	20.50
MBBW4-25S	25S	M25	10	31.00	18.00	24.00
MBBW4-25L	25L	M25	10	33.00	20.00	27.20
MBBW4-32	32	M32	10	40.50	26.30	33.50
MBBW4-40L	40L	M40	15	49.00	32.00	40.00
MBBW4-50S	50S	M50	15	56.50	38.20	46.30
MBBW4-50L	50L	M50	15	62.50	44.00	52.60
MBBW4-63S	63S	M63	15	68.80	50.10	59.00
MBBW4-63L	63L	M63	15	76.00	56.00	65.30
MBBW4-75S	75S	M75	15	84.00	62.00	71.60
MBBW4-75L	75L	M75	15	90.00	68.00	78.00
MBBW4-90L	90L	M90	20	103.00	80.50	91.00

www.marutibrassproducts.com

marutibrass.overseas@gmail.com
info@marutibrassproducts.com
www.marutibrassproducts.com
+91 95745 94421
+91 70464 04697

Brass BWR Cable Glands

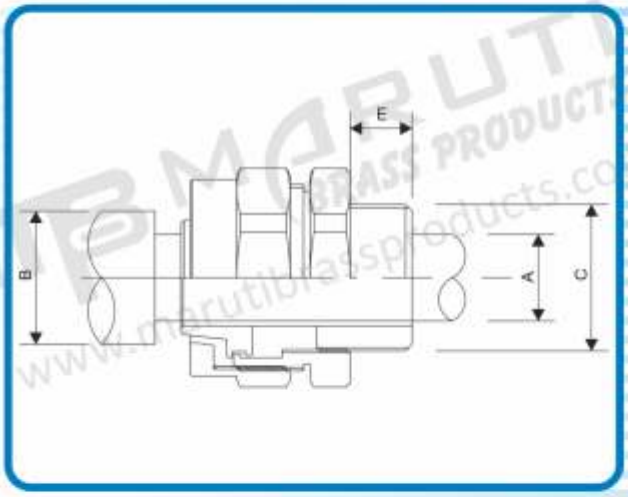

Brass BWR Cable Glands

Code	Gland Size	Threaded Size 'C'	Threaded Length 'E'	Across Flat	Cable Range	
					Range 'A'	Range 'B'
MBBWR-20S	20S	M20	10	22.00	11.50	16.00
MBBWR-20L	20L	M20	10	27.00	14.00	21.20
MBBWR-25	25	M25	10	35.00	20.00	27.00
MBBWR-32	32	M32	10	41.00	26.20	33.50
MBBWR-40	40	M40	15	51.50	32.50	40.00
MBBWR-50	50	M50	15	64.50	44.40	52.50
MBBWR-63	63	M63	15	80.00	55.40	65.50
MBBWR-75	75	M75	15	94.50	69.50	79.00

www.marutibrassproducts.com

Brass CW Cable Glands

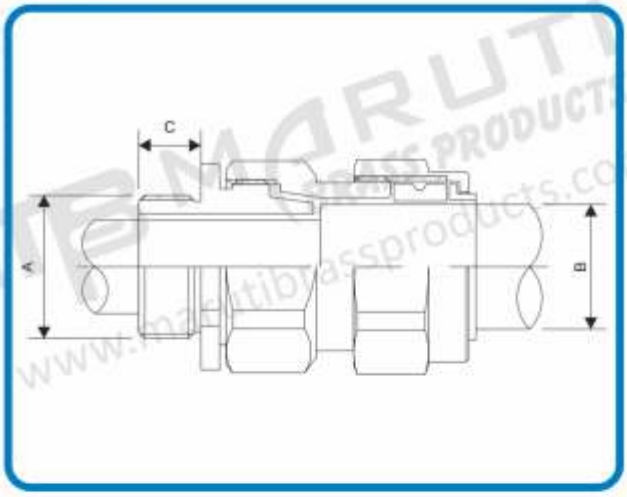

Brass CW Cable Glands

Code	Gland Size	Thread Size NPT 'A'	Thread Size Metric 'A'	Threaded Length 'C'	Cable Range 'B'	
					Min.	Max.
MBCW320S	20S	1/2"	M20	10	11.50	15.50
MBCW320L	20L	1/2"	M20	10	14.00	20.50
MBCW325S	25S	3/4"	M25	10	18.00	24.00
MBCW325L	25L	3/4"	M25	10	20.00	27.20
MBCW332S	32S	1"	M32	15	26.30	33.50
MBCW332L	32L	1"	M32	15	26.30	33.50
MBCW340S	40S	1.1/4"	M40	15	31.50	39.50
MBCW340L	40L	1.1/4"	M40	15	32.00	40.50
MBCW350S	50S	1.1/2"	M50	15	38.20	46.30
MBCW350L	50L	1.1/2"	M50	15	44.00	52.60
MBCW363S	63S	2"	M63	15	50.10	59.00
MBCW363L	63L	2"	M63	15	56.00	65.30
MBCW375S	75S	2.1/2"	M75	15	62.00	71.60
MBCW375L	75L	2.1/2"	M75	15	68.00	78.00
MBCW390S	90S	3"	M90	20	80.50	91.00
MBCW390L	90L	3"	M90	20	80.50	91.00

marutibrass.overseas@gmail.com
info@marutibrassproducts.com
www.marutibrassproducts.com
+91 95745 94421
+91 70464 04697

Brass CW 4 Part Cable Glands

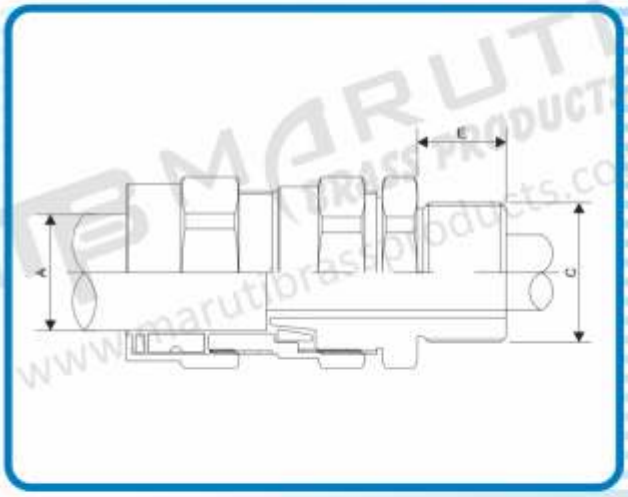

Brass CW 4 Part Cable Glands

Code	Gland Size	Thread Size Metric 'A'	Thread Size NPT 'A'	Threaded Length 'C'	Cable Range 'B'	
					Min.	Max.
MBCW420S	20S	M20	1/2"	10	11.50	15.50
MBCW420L	20L	M20	1/2"	10	14.00	20.50
MBCW425S	25S	M25	3/4"	10	18.00	24.00
MBCW425L	25L	M25	3/4"	10	20.00	27.20
MBCW432	32	M32	1"	10	26.30	33.50
MBCW440	40	M40	1.1/4"	15	32.00	40.00
MBCW450S	50S	M50	1.1/2"	15	38.20	46.30
MBCW450L	50L	M50	1.1/2"	15	44.00	52.60
MBCW463S	63L	M63	2"	15	50.10	59.00
MBCW463L	63L	M63	2"	15	56.00	65.30
MBCW475S	75S	M75	2.1/2"	15	62.00	71.60
MBCW475L	75L	M75	2.1/2"	15	68.00	78.00
MBCW490	90	M90	3"	20	80.50	91.00

www.marutibrassproducts.com

Brass Marine Cable Glands

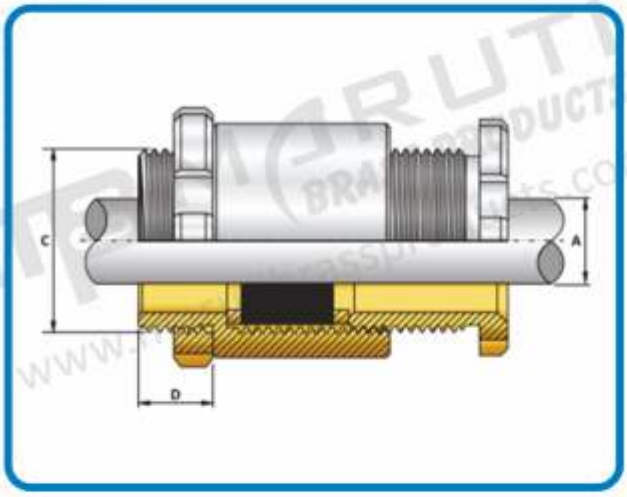

Brass Marine Cable Glands

Code	Gland Size	Thread BSP	Cable Dia 'A'	Thread Length 'D'	Entry Hole Size (mm)
MBMC-10	M-10	3/8"	6-7	11.00	18.00
MBMC-15	M-15	1/2"	8-11	11.00	22.00
MBMC-20	M-20	3/4"	11-15	11.00	27.00
MBMC-25	M-25	1"	15-20	11.00	34.00
MBMC-30	M-30	1.1/4"	20-26	12.00	43.00
MBMC-35	M-35	1.1/2"	26-30	12.00	49.00
MBMC-40	M-40	1.1/2"	30-34	12.00	49.00
MBMC-45	M-45	2"	34-40	12.00	61.00
MBMC-50	M-50	2"	40-44	12.00	61.00
MBMC-55	M-55	2.1/2"	44-50	12.00	75.00
MBMC-60	M-60	2.1/2"	50-56	12.00	75.00
MBMC-65	M-65	3"	56-60	12.00	89.00
MBMC-70	M-70	3"	60-64	12.00	89.00
MBMC-75	M-75	3"	64-70	14.00	89.00

marutibrass.overseas@gmail.com
info@marutibrassproducts.com
www.marutibrassproducts.com
+91 95745 94421
+91 70464 04697

Brass E1W Cable Glands

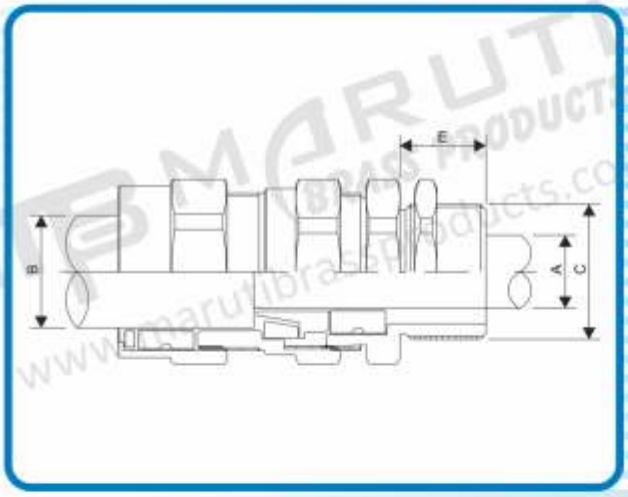

Brass E1W Cable Glands

Code	Gland Size	Thread Size 'C'		Thread Length 'E'	Cable Range 'A'		Cable Range 'B'	
		Metric	NPT		Min.	Max.	Min.	Max.
MBE1W20S	20S	M20	1/2"	15	8.80	11.70	11.80	16.00
MBE1W20L	20L	M20	1/2"	15	11.40	14.00	14.00	20.80
MBE1W25S	25S	M25	3/4"	15	13.00	16.00	18.00	24.00
MBE1W25L	25L	M25	3/4"	15	17.30	20.00	20.30	27.40
MBE1W32S	32S	M32	1"	15	20.00	23.00	24.50	31.00
MBE1W32L	32L	M32	1"	15	24.20	26.30	26.50	33.50
MBE1W40S	40S	M40	1.1/4"	15	26.00	29.00	30.40	36.00
MBE1W40L	40L	M40	1.1/4"	15	29.50	32.10	33.20	40.00
MBE1W50S	50S	M50	1.1/2"	15	33.00	38.10	40.00	46.50
MBE1W50L	50L	M50	1.1/2"	15	38.00	44.00	44.00	52.60
MBE1W63S	63S	M63	2"	20	44.00	50.50	50.00	59.00
MBE1W63L	63L	M63	2"	20	50.00	56.00	56.00	66.00
MBE1W75S	75S	M75	2.1/2"	20	56.00	62.00	63.50	71.00
MBE1W75L	75L	M75	2.1/2"	20	62.00	68.50	69.00	78.00
MBE1W90L	90L	M90	3"	20	65.00	80.00	84.00	96.00

Brass Alco Cable Glands

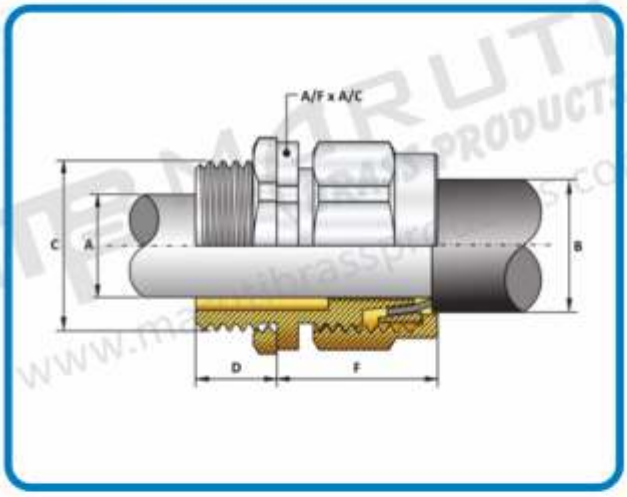

Brass Alco Cable Glands

Code	Thread "C" Metric	Thread Length "D"	Cable Dia. "A" Max.	Cable Dia. "B" Max.	Wire Dia.	Protrusion Length "F"	A/F	A/C
MBAL-204	20	10.00	12.50	16.00	0.9-1.25	17.00	24.25	26.20
MBAL-206	20	10.00	15.00	20.00	0.9-1.25	17.50	26.20	26.20
MBAL-254	25	10.00	18.50	24.00	1.25-1.60	19.00	33.00	33.00
MBAL-256	25	10.00	20.50	27.00	1.25-1.60	20.25	35.00	39.20
MBAL-324	32	10.00	27.25	34.00	1.60-2.00	20.50	45.00	50.00
MBAL-326	32	10.00	27.25	34.00	1.60-2.00	20.50	45.00	60.00
MBAL-405	40	10.00	31.00	37.50	2.00-2.50	21.00	50.00	65.00
MBAL-503	50	15.00	34.50	41.00	2.00-2.50	22.00	52.00	75.00
MBAL-505	50	15.00	41.00	48.00	2.50	21.50	61.50	80.00
MBAL-636	63	15.00	44.50	54.00	2.50	24.25	65.00	85.00
MBAL-753	75	15.00	51.50	59.00	2.50-3.15	26.00	72.00	95.00
MBAL-755	75	15.00	56.75	65.00	2.50	26.00	80.00	100.00

marutibrass.overseas@gmail.com
info@marutibrassproducts.com
www.marutibrassproducts.com
+91 95745 94421
+91 70464 04697

Brass PG Cable Glands

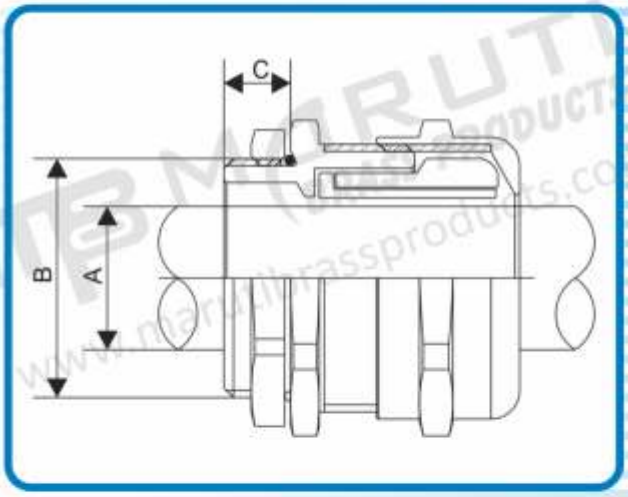

Brass PG Cable Glands

Code	Gland Size PG	Thread Size "B" PG	Thread Length "C"		Across Flat	Cable Range "A"	
			Short	Long		Min.	Max.
MBPG7-6.5	PG 7	PG 7	6	10	14.00	3.00	6.50
MBPG9-8	PG 9	PG 9	6	10	17.00	4.00	8.00
MBPG11-10	PG 11	PG 11	6	10	20.00	6.00	10.00
MBPG13-12	PG 13	PG 13	6.5	10	22.30	8.00	12.00
MBPG16-14	PG 16	PG 16	6.5	10	24.00	10.00	14.00
MBPG21-18	PG 21	PG 21	7	12	30.00	13.00	18.00
MBPG29-20	PG 29	PG 29	8	12	40.00	13.00	20.00
MBPG29-25	PG 29	PG 29	8	12	40.00	18.00	25.00
MBPG36-32	PG 36	PG 36	8	12	50.00	22.00	32.00
MBPG42-35	PG 42	PG 42	9	15	57.00	27.00	35.00
MBPG42-38	PG 42	PG 42	9	15	57.00	32.00	38.00
MBPG48-35	PG 48	PG 48	10	15	68.00	29.00	35.00
MBPG48-44	PG 48	PG 48	10	15	68.00	37.00	44.00

Brass Matric Cable Glands

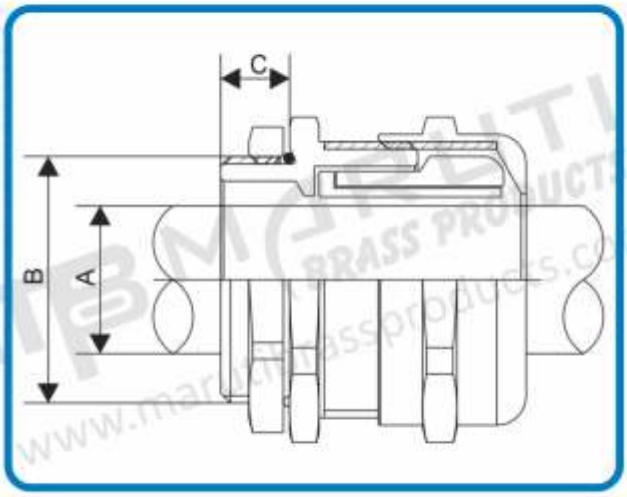

Brass Matric Cable Glands

Code	Gland Size Metric	Thread Size "B" Metric	Thread Length "C"		Across Flat	Cable Range "A"	
			Short	Long		Min.	Max.
MBM12-6.5	M12	M12	6	10	14.00	3.00	6.50
MBM12-8	M12	M12	6	10	17.00	4.00	8.00
MBM16-8	M16	M16	6	10	17.00	4.00	8.00
MBM16-10	M16	M16	6	10	20.00	6.00	10.00
MBM20-12	M20	M20	6.5	10	22.00	8.00	12.00
MBM20-14	M20	M20	6.5	10	24.00	10.00	14.00
MBM25-14	M25	M25	7	12	27.00	9.00	14.00
MBM25-16	M25	M25	7	12	27.00	11.00	16.00
MBM25-18	M25	M25	7	12	30.00	13.00	18.00
MBM32-20	M32	M32	8	12	40.00	13.00	20.00
MBM32-25	M32	M32	8	12	40.00	18.00	25.00
MBM40-23	M40	M40	8	15	44.00	15.00	23.00
MBM40-28	M40	M40	8	15	44.00	19.00	28.00
MBM40-32	M40	M40	8	15	50.00	22.00	32.00
MBM50-29	M50	M50	9	15	55.00	22.00	29.00
MBM50-35	M50	M50	9	15	55.00	27.00	35.00
MBM50-38	M50	M50	9	15	57.00	32.00	38.00
MBM63-35	M63	M63	10	15	68.00	29.00	35.00
MBM63-44	M63	M63	10	15	68.00	37.00	40.00
MBM75-53	M75	M75	15	20	85.00	43.00	53.00
MBM75-60	M75	M75	15	20	85.00	53.00	60.00

marutibrass.overseas@gmail.com
info@marutibrassproducts.com
www.marutibrassproducts.com
+91 95745 94421
+91 70464 04697

Brass Double Compression Cable Glands

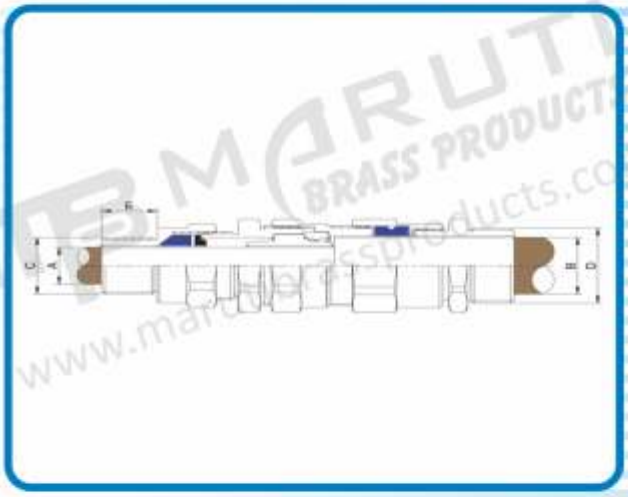

Brass Double Compression Cable Glands

Code	Nipple Size "C" (Inch)	Suitable for Cable Overall Dia.		Dia. "A" (mm)	Dia. "B" (mm)	A/F	A/C	Length "E" (mm)
		From	To					
MBDC-01	3/4"	16.50	18.50	14.50	19.00	27.5	31.50	15.00
MBDC-02	1"	18.50	20.00	18.00	21.00	30.00	34.50	15.00
MBDC-03	1"	20.50	23.00	19.00	23.50	31.50	36.00	15.00
MBDC-04	1"	23.50	26.00	20.50	27.00	36.00	41.50	15.00
MBDC-05	1.1/4"	26.50	30.00	25.50	31.00	41.00	47.00	15.00
MBDC-06	1.1/2"	30.50	33.00	31.00	34.50	47.00	54.00	15.00
MBDC-07	1.1/2"	33.50	37.00	32.00	38.00	50.00	57.00	15.00
MBDC-08	2"	37.50	41.00	38.50	42.50	56.00	64.00	15.00
MBDC-09	2"	41.50	46.00	40.00	47.00	59.00	67.00	15.00
MBDC-10	2"	46.50	52.00	44.00	53.00	67.00	77.00	20.00
MBDC-11	2.1/2"	54.00	61.00	56.50	62.00	80.00	92.00	20.00
MBDC-12	3"	61.00	66.00	64.00	68.00	85.00	98.00	20.00
MBDC-13	3.1/4"	72.50	79.00	74.00	80.00	99.00	113.00	20.00
MBDC-14	3.1/2"	78.50	84.00	78.00	85.00	105.00	121.00	20.00
MBDC-15	4"	84.50	94.00	90.50	97.00	114.00	132.00	20.00
MBDC-16	4.1/2"	94.50	104.00	101.00	106.00	130.00	149.00	20.00

*** Products available also as per customer's specification like Drawing or Sample**

Brass Single Compression Cable Glands

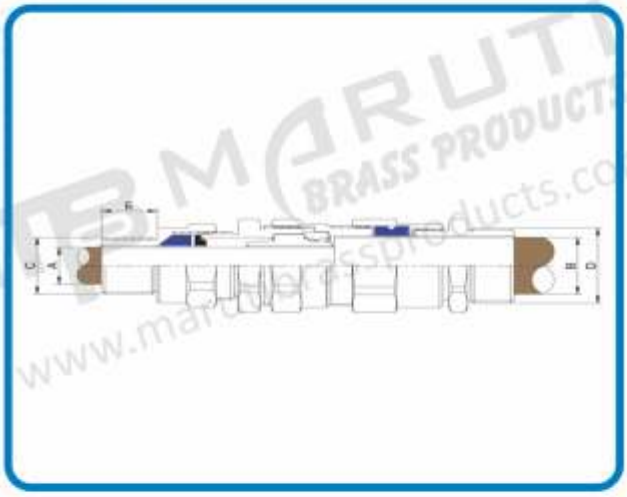

Brass Single Compression Cable Glands

Code	Nipple Size "C"	Suitable for Cable Overall Dia.	Dia. "A" (mm)	Dia. "B" (mm)	A/F	A/C	Length "E" (mm)
MBSC-01	16 X 1.5	9	12	16	22	25.50	9
MBSC-02	16 X 1.5	12	12	18.50	25	29	9
MBSC-03	20 X 1.5	12	15	18.50	25	29	9
MBSC-04	20 X 1.5	18	15	24	30	34.50	9.50
MBSC-05	25 X 1.5	18	20.50	24	31.50	36	9.50
MBSC-06	25 X 1.5	21	20.50	28.50	35	40	10
MBSC-07	32 X 1.5	25	27	33	40	46	12
MBSC-08	40 X 1.5	29	34	37	46	53	12
MBSC-09	40 X 1.5	33	34	41	50	57.50	12
MBSC-10	50 X 1.5	38	44	47	58	67	13
MBSC-11	50 X 1.5	43	44	52	65	75	13
MBSC-12	63 X 1.5	48	55	61.50	73	84	14
MBSC-13	63 X 1.5	55	55	65	77	89	14
MBSC-14	75 X 1.5	61	68	71	85	98	15
MBSC-15	75 X 1.5	67	67	76	90	104	15
MBSC-16	82 X 1.5	73	73	82	97	112	17
MBSC-17	90 X 1.5	79	81	91	108	124	19
MBSC-18	100 X 1.5	84.50	91	98	117	135.00	20

*** Products available also as per customer's specification like Drawing or Sample**

marutibrass.overseas@gmail.com
info@marutibrassproducts.com
www.marutibrassproducts.com
+91 95745 94421
+91 70464 04697

Brass Cable Glands Accessories

Brass Adaptor Light

Brass Adaptor Matric

Brass Earth Tag

Brass Lock Nut Collar

Brass Lock Nut

Brass Plug Allen Key

Brass Plug Collar

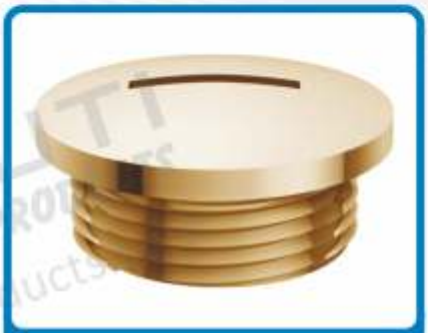

Brass Plug Slotted

Brass Reducer Knurling

Brass Cable Glands Accessories

Brass Reducer Matric

Brass Serrated Washer External

Brass Serrated Washer internal

PVC Shroud

Thread Seal

marutibrass.overseas@gmail.com
info@marutibrassproducts.com
www.marutibrassproducts.com
+91 95745 94421
+91 70464 04697

MARUTI BRASS PRODUCTS

SAVE WATER
SAVE LIFE

.:: Distributer ::.

+91 95745 94421
+91 70464 04697

marutibrass.overseas@gmail.com
info@marutibrassproducts.com

www.marutibrassproducts.com

Plot No. 4204, F Road, Phase-3, Dared, Jamnagar - 361004, Gujarat, INDIA.